LUCIP for the
General Separations Area Consolidation Unit

Consisting of:

- Old Radioactive Waste Burial Ground (Including Solvent Tanks) (643-E)
- HP-52 Ponds
- H-Area Retention Basin (281-3H) and Spill on 05/01/1956 of Unknown of Retention Basin Pipe Leak (NBN)
- Warner's Pond (685-23G) and Spill on 03/08/1978 of Unknown of Seepage Basin Pile Leak in
- H-Area Seepage Basin (NBN) and Spill on 02/08/78 of Unknown of H-Area Process Sewer Line Cave-In, NBN

Appendix A of Corrective Measures Implementation/Remedial Action Implementation Plan (CMI/RAIP) for the General Separations Area Consolidation Unit

WSRC-RP-2003-4053, Revision.1.1, November 2003

This page was intentionally left blank.

APPENDIX A

LAND USE CONTROL IMPLEMENTATION PLAN FOR THE GENERAL SEPARATIONS AREA CONSOLIDATION UNIT

LAND USE CONTROL IMPLEMENTATION PLAN

The General Separations Area Consolidation Unit (GSACU) Land Use Control Implementation Plan (LUCIP) will be appended to the Savannah River Site (SRS) Land Use Control Assurance Plan (LUCAP).

The selected remedy leaves hazardous substances in place that pose a potential future risk and will require land use restrictions for an indefinite period of time. As negotiated with the United States Environmental Protection Agency (USEPA) and in accordance with USEPA Region IV policy (Johnston 1998), the Savannah River Site (SRS) has developed a LUCAP (WSRC 2002b) to ensure that land use restrictions are maintained and periodically verified. This LUCIP provides detailed and specific measures required for the land use controls selected as part of this remedy. The United States Department of Energy (USDOE) is responsible for implementing, maintaining, monitoring, reporting upon, and enforcing the land use controls described herein. Upon final approval, the LUCIP will be appended to the LUCAP and is considered incorporated by reference into the Post-Construction Report/Corrective Measures Implementation Report (PCR/CMIR), establishing land use controls implementation and maintenance requirements enforceable under the Comprehensive Environmental Response, Compensation, and Recovery Act (CERCLA). The approved LUCIP will establish implementation, monitoring, maintenance, reporting and enforcement requirements for the unit. The LUCIP will remain in effect until modified as needed to be protective of human health and the environment. LUCIP modification will only occur through another CERCLA document.

1.0 REMEDY SELECTION

1.1 General Separations Area Consolidation Unit

The SRS occupies approximately 310 square miles of land adjacent to the Savannah River, principally in Aiken and Barnwell counties of South Carolina. The GSACU is located near the center of SRS adjacent to E Road and south of H-Area, and includes the following waste units:

- H-Area Retention Basin (HRB) (281-3H).
- Warner's Pond (685-23G), including a portion of the H-Area Inactive Process Sewer Line (HIPSL).
- HP-52 Ponds.
- Old Radioactive Waste Burial Ground (ORWBG) (643-E), including 22 underground solvent tanks known as OSTs.

Collectively, these waste units are identified as a single operable unit (OU) because of their proximity to each other and similar health and environmental threats.

The Federal Facility Agreement (FFA 1993) for SRS lists the GSACU as a Resource Conservation and Recovery Act (RCRA) Solid Waste Management Unit/Comprehensive Environmental Response, Compensation and Liability Act (CERCLA) unit requiring further evaluation. The GSACU required further evaluation through an investigation process that integrates and combines the RCRA Facility Investigation (RFI) process with the CERCLA Remedial Investigation (RI) process to determine the actual or potential impact to human

health and the environment of releases of hazardous substances, pollutants or contaminants to the environment.

1.1.1 H-Area Retention Basin

HRB (281-3H) is a single open inactive retention basin surrounded by a berm. HRB is approximately 60 m (200 ft) long by 37 m (120 ft) wide by 2 m (7 ft) deep. From 1955 to 1972, it received non-hazardous, radioactively-contaminated wastewater from chemical separations facilities and from the H-Area Tank Farm. Wastewater flowed through an underground process sewer line to a diversion box that directed the waste stream to either HRB or a former retention basin (281-7H) that was located to the west side of HRB. The process sewer line from the diversion box to HRB is no longer in service and is part of the HRB unit. This segment is a 1-m (3-ft) diameter concrete pipe approximately 23 m (75 ft) long. Drainage from HRB was via a 1-m (3-ft) diameter concrete pipe approximately 30 m (100 ft) long on the south side of the basin. The pipe discharged to a concrete spillway along an existing active effluent stream that flows from H-Area to Fourmile Branch.

In May 1956, an undetermined volume of material leaked from the discharge gate on the south side of HRB. SRS constructed a temporary holding pond (approximately 15 x 15 m [45 x 45 ft]) to contain the material. This area was identified as a site evaluation area (SEA) called "Spill on 05/01/1956 of Unknown Amount of Retention Basin Pipe Leak" and subsequently has been included in the HRB unit.

There is a soil pile on the western side of the basin. The soil pile is approximately 50 m (160 ft) long by 18 m (60 ft) wide by 5 m (15 ft) high. The soil is the excavated remains of a former basin (281-7H) which was adjacent to HRB site.

Trees and other vegetation were removed from HRB in 1996. HRB is now primarily covered with grasses and scattered small shrubs. Standing rainwater is normally present in HRB. The amount varies seasonally, depending on the amount of rainfall and the evaporation rate.

1.1.2 Warner's Pond

Warner's Pond (685-23G) is approximately 4-acre in size centered on an area that was formerly occupied by a pond approximately 1-acre in size. The pond was constructed in 1956 as an emergency holding pond to receive contaminated cooling water from the 221-H (H Canyon) building that flowed into an effluent stream. Contaminated cooling water was discharged to Warner's Pond on three occasions: 1956 (cooling coil leak), 1960 (source not determined), and 1965 (cooling coil leak which released approximately 300 curies [Ci] of activity). Contaminated water from all three events entered the pond via the effluent stream leading from H Area and was diverted or pumped to HRB or to the H-Area Seepage Basins. In 1966, Warner's Pond was drained, backfilled with clean soil, and paved with asphalt.

There are several inactive pipelines that run through the Warner's Pond area and are part of the unit. One is a RCRA regulated pipeline known as the H-Area Inactive Process Sewer Line (HIPSL). The RCRA-HIPSL is an 46-centimeter (cm) (18-inch) diameter vitrified clay pipe through which liquid waste was transported from the H-Area Separations Facilities to the H-Area Seepage Basins. Facility records indicate the sewer line operated from 1955 to 1982. This effluent was characterized as hazardous due to mercury and chromium concentrations and low pH. No listed wastes were managed at the RCRA-HIPSL. There are approximately 380 m (1,250 ft) of RCRA-HIPSL, several manholes, and a diversion box inside the Warner's Pond OU boundary.

The other two inactive process sewer lines (IPSLs) in the Warner's Pond waste unit are within the berms and are subject to CERCLA remedial action in accordance with the SRS Federal Facilities Agreement (FFA 1993), as opposed to corrective action under the SRS RCRA Permit. One section of the CERCLA-IPSL is approximately 105 m (350 ft) of reinforced concrete pipe, and the other section is approximately 70 m (230 ft) of polyethylene pipe. These pipelines adjoin the RCRA-HIPSL from a network of sewer lines (now inactive) that carried effluent to several non-RCRA regulated units.

In 1978, two spills (overflows) from a diversion box along the then-active vitrified clay HIPSL contaminated soils in the vicinity of the diversion box over an area at least 8 x 75m (25 by 250 ft). This area was identified as a SEA called "Spill on 03/08/1978 of Unknown Seepage Basin Pipe Leak in H-Area Seepage Basin (NBN)" and subsequently has been included in the Warner's Pond unit.

There are also reports that 12 m (40 ft) of the HIPSL collapsed in 1978 just north of the railroad line at the northern part Warner's Pond. A parallel bypass line was installed adjacent to the broken section, which was abandoned in place. This area was identified as a SEA called "Spill on 02/08/1978 of H-Area Process Sewer Line Cave-In (NBN)" and subsequently has been included in the Warner's Pond unit.

In 1978, radiological survey data and sampling data identified elevated beta-gamma activity at Warner's Pond that warranted corrective measures. Soils exceeding 2,000 counts per minute (approximately 765 m^3 [1,000 yd^3]) were removed from the former pond area and sent to the Burial Ground Complex for disposal. The area was then treated with herbicide, graded with fresh soil, topped with a clay overburden, and re-paved with asphalt. The effluent stream that fed the former pond has been re-directed around the contaminated area.

Trees and other vegetation were removed from the fenced Warner's Pond in 1996. Warner's Pond is primarily covered with asphalt that is in generally good condition with few cracks. The area between the south side of the Warner's Pond fence and E Road, which contains woody vegetation and soils with surficial contamination, has been included in this remediation project.

1.1.3 HP-52 Ponds

The HP-52 Ponds waste unit (no building number) is a site approximately 1.1 acre in size centered on an area that was formerly occupied by two small holding ponds. In 1967, during a transfer of high level waste at the H-Area Tank Farm, some spilled material flowed into a nearby storm sewer and reached the HP-52 outfall. Two small holding ponds referred to as the "HP-52 Cesium Ponds" or "HP-52 Ponds" were constructed to contain the contaminated water. Contaminated soil from the spill containing approximately 1,200 Ci of radioactivity was removed and shipped to the ORWBG. The stream banks below the HP-52 outfall were paved with asphalt to minimize contaminant migration from the soil to the stream.

A smaller spill occurred in 1969 when an H-Area Tank Farm waste transfer line ruptured and released high level waste to the storm sewer and outfall. Following this event, the pond areas were filled with contaminated soil excavated from the stream banks, and covered with clean backfill. Stream flow was diverted from the original effluent ditch and re-directed around the former ponds area.

There is no historical evidence to document the exact locations of the former ponds at HP-52 Ponds. The former ponds area was inferred from the field locations of, and information associated with, two concrete waste site markers. Several soil piles are present at HP-52 Ponds. The piles are the result of

movement of soil at the unit to fill the pond areas, to backfill ditches, and to redirect the active regulated effluent ditch.

Trees and other vegetation were removed from HP-52 Ponds in 1996. The HP-52 Ponds unit is now primarily covered with grasses and scattered small shrubs.

1.1.4 Old Radioactive Waste Burial Ground

The ORWBG (643-E) is located in E-Area directly south of the Low-Level Radioactive Waste Disposal Facility (LLRWDF) (643-7E) and the Mixed Waste Management Facility (MWMF) (643-28E). The ORWBG is bordered by SRS E Road on the south and F-Area on the west. The ORWBG is part of the central disposal area for solid radioactive waste at SRS known as the Burial Ground Complex (BGC). Waste was disposed of at the ORWBG from 1952 until 1974, when the site was essentially filled and the majority of waste disposal operations shifted to other facilities in the BGC.

The ORWBG is a 76-acre disposal area for solid radioactive waste produced at SRS, as well as for shipments from other USDOE and Department of Defense facilities. During its operational history, approximately 200,000 m^3 (7,125,000 ft^3) of radioactive wastes, including radioactively contaminated hazardous substances, were buried at depth within the ORWBG. Most wastes disposed of in the ORWBG were placed in drums, cans, cardboard boxes, plastic bags, and metal containers and then buried in earthen trenches approximately 6 m (20 ft) deep. Most waste was disposed of at the ORWBG from 1952 until 1972. In addition, small quantities of radioactive waste (contaminated primarily with transuranic isotopes) were disposed of in 1973 and 1974. At the time of burial, approximately 5.1 million Ci of radioactivity was placed in the ORWBG. Much of the short-lived radioactivity has decayed, but a large inventory of radioactive and hazardous substances remain buried at depth in the ORWBG.

In 1996, USDOE issued an Interim Record of Decision (IROD) (WSRC 1996) to place a soil cover on the ORWBG. The interim action installed a minimum 0.6 m (2 ft) thick compacted low permeability native soil layer underlying a 15 cm (6 inch) vegetative layer with proper slopes and associated drainage network to minimize infiltration and leaching of the buried waste. This interim action was completed in May 1998.

A second interim action was started in 2001 (WSRC 2000) to stabilize residual contamination remaining in the old solvent tanks (OSTs) within the ORWBG. The 22 OSTs, including the residual materials in the tanks, have been grouted in place. The physical work for this interim action was completed in March 2003.

1.2 Nature and Extent of Contamination at GSACU Waste Units

The constituents of concern (COCs) pertinent to the GSACU, as presented in the ROD (WSRC 2002), include the source units (e.g., contamination in soil) for the waste units. Groundwater in the aquifer under HRB, Warner's Pond, and HP-52 Ponds is not included in the scope of this CMI/RAIP because it is being addressed separately under the GSA Eastern Groundwater OU. The ORWBG is being addressed by the corrective action program in the SRS RCRA Part B permit for the Mixed Waste Management Facility (MWMF) (WSRC 1995) in accordance with Settlement Agreement 87-52-SW.

Principle threat source material (PTSM) is a COC that has been determined to present a risk of 1×10^{-3}, or greater, to human health. Contaminant migration constituents of concern (CMCOCs) are COCs that have been determined to present a risk of leaching to the groundwater at concentrations above the maximum contaminant level (MCL) within 1,000 years.

1.2.1 HRB

The unit investigation determined that soils in the basin bottom/sidewalls, in the basin berm, in the soil pile, and in the sewer line and discharge area are contaminated with radionuclides and arsenic. PTSM is present, primarily as cesium-137. CMCOCs are also present, primarily as strontium-90. Along the process sewer line, the contamination is at and below the pipe elevation. The discharge area has the deepest detected contamination. At the soil pile, the contamination is limited to the soil pile itself and does not extend below the asphalt layer beneath the soil pile. Available data suggest that the hardpan provides a natural limit to the downward migration of contaminants at HRB, although this is not a certainty.

1.2.2 Warner's Pond

The investigations determined that soils in the former pond area, in the berms, and along the HIPSL are contaminated with radionuclides. PTSM is present as cesium-137. Radionuclide CMCOC contaminants were primarily strontium-90. An additional CMCOC, mercury, was present in some soils in the former pond area. The extent of contamination, including any remnant left after excavation, and depth of the hardpan layer, was refined during post-ROD field activities.

1.2.3 HP-52 Ponds

The investigations determined that soils and sediments in the former ponds area, the old effluent ditch, the soil piles, and the historic drainage channel near the former beaver pond are contaminated with radionuclides. PTSM is present as cesium-137. There are no CMCOCs at HP-52 Ponds. The extent of contamination, including any remnant left after excavation, and depth of the hardpan, was refined during post-ROD field activities.

1.2.4 ORWBG

Traditional characterization (i.e., intrusive sampling) was not performed at the ORWBG to avoid disturbing material under the interim soil cover. Characterization was accomplished through a detailed literature review; evaluation of aerial photographs, construction drawings, health physics burial maps, and the computerized burial record analysis database, evaluation of past studies, review of process history, interviews with SRS staff, and non-intrusive investigations. This investigation is documented in *Source Term for the Old Radioactive Waste Burial Ground (ORWBG), Savannah River Site* (WSRC 1997a). The data provided sufficient information to understand the hazards associated with the ORWBG and to select a remedial alternative.

1.3 Remedial Action Overview

The selected remedial action established in the ROD is based on an evaluation of potential alternatives performed in accordance with the National Oil and Hazardous Substance Contingency Plan (NCP) and the Comprehensive Environmental Response, Compensation, and Liability Act (CERCLA) (as amended). As stated in the ROD (WSRC 2002), the selected RA for the GSACU includes the following elements:

1. Excavate materials constituting industrial PTSM and soil containing CMCOCs above RGs at HRB, Warner's Pond, and HP-52 Ponds to the extent practicable. The excavation will not breach the integrity of the hardpan. Soil RGs for CMCOCs are established to prevent leaching of constituents to groundwater at concentrations above the maximum concentration level (MCL) within 1,000 years.

2. Manage standing surface water (in HRB, Warner's Pond, and HP-52 Ponds) and water which accumulates during excavation by solidification and consolidation with the excavated soil and/or by another means.

3. Consolidate the excavated soil and material by transferring it to the areas of the ORWBG that have not yet been covered by the native soil cover (e.g., over the OSTs).

4. When inactive pipelines are encountered during removal of soil, excavate those sections of the pipelines with the soil. At Warner's Pond, this will include the inactive CERCLA pipelines within the berms, the diversion box, and the RCRA-regulated HIPSL. Characterization data show that soil around the HIPSL is non-hazardous. Sections of the HIPSL and any contents will be sampled and analyzed during the characterization of Warner's Pond to determine if they are hazardous in accordance with South Carolina Hazardous Waste Management Regulation R.61-79.261. If the HIPSL pipeline or its contents are hazardous, these materials will not be consolidated into the ORWBG. A RCRA Closure Plan will be developed to document the disposition of the RCRA pipeline.

   For remaining intact portions of inactive pipelines, including portions that are not in contact with PTSM or cannot be readily removed (such as the section of the HIPSL under the railroad track), plug the ends of the pipelines and grout in place. If a pipeline is not intact, cannot be reliably grouted in place, and is non-hazardous, remove it and consolidate it with the soil transferred to the ORWBG. Risks posed by remnant contamination in soil after excavation will be determined prior to backfilling.

5. Consolidate any vegetation in contact with PTSM by removing it and transferring it to the ORWBG. Vegetation will be shredded, chipped, or

spatially distributed and incorporated into the excavated soil. Placement of this material at ORWBG will be engineered in a manner that minimizes subsidence.

6. Evaluate the risk of remnant material after excavation at HRB, Warner's Pond, and HP-52 Ponds. Contaminant migration risk from the potential source to the groundwater beneath each unit will be evaluated.

7. Mitigate residual risk at HRB, Warner's Pond, and HP-52 Ponds by backfilling and placing clean soil over open excavations that may contain residual contamination exceeding RGs. A soil cover will be used to minimize infiltration so that (1) no unit-related contaminants will cause MCL exceedances in the groundwater beneath each unit, and (2) the accumulation of perched water atop the hardpan is minimized.

   Note: at HRB and Warner's Pond, a low permeability geosynthetic cover will be installed, as stated in the CMI/RAIP, Section 1.5.2, RAIP Scoping Meeting, Item No. 5.

8. Restore surface water drainage at Warner's Pond to a natural state by removing the berms that cause ponding of water.

9. Prepare a post-construction report for HRB, Warner's Pond, and HP-52 Ponds to summarize the remediation activities and summarize how residual risks are addressed.

10. Implement institutional controls at HRB, Warner's Pond, and HP-52 Ponds. Institutional controls will consist of site maintenance (site inspections, mowing, general housekeeping, repair of erosion damage, and other routine maintenance as needed) and access controls (warning signs and land use

restrictions). Institutional controls will include continued use of SRS's Site Use and Site Clearance.

11. Construct a low-permeability geosynthetic cover system (with a soil hydraulic conductivity of $\leq 1 \times 10^{-7}$ cm/sec) over the ORWBG; including the areas where consolidated materials from HRB, Warner's Pond, and HP-52 Ponds shall be placed. A hydraulic conductivity of $\leq 1 \times 10^{-7}$ cm/sec is selected because it provides infiltration control that sufficiently manages uncertainties related to residual contamination without further investigation, and it is consistent with low permeability caps placed over similar facilities at SRS.

12. Implement institutional controls at the ORWBG. Institutional controls will consist of site maintenance (site inspections, mowing, general housekeeping, repair of erosion damage, other routine maintenance as needed, and periodic maintenance of the infiltration control system) and access controls (security fences, warning signs, and land use restrictions). Institutional controls will include continued use of SRS's Site Use and Site Clearance.

13. Before institutional controls are terminated at the ORWBG, install intruder barriers over the long-lived persistent radioactive hot spots to deter inadvertent human intrusion. The likely configuration of the intruder barrier is heavy rip-rap. The barrier will be installed above the low permeability cap but beneath a soil cover. Covering the rip rap will minimize development of an undesirable habitat (e.g., a habitat among rip-rap favorable for deep-rooting plants and burrowing animals that could degrade the low permeability cap). Placement of the barrier will not interfere with the long-term integrity of the cap. A reasonable estimated timeframe for installing the intruder barrier is 100 years. The barrier will be installed before institutional controls are terminated; the USDOE expects to maintain institutional controls at the

Burial Ground Complex for at least 100 years. Installation of these intruder barriers are not part of this remedial action.

Note: The final intruder barriers over the long-lived persistent radioactive hot spots at the ORWBG will not be required until the USDOE relinquishes institutional control of the BGC. The estimated time frame of 100 years for installing these barriers is based on the assumed time frame for continued USDOE ownership.

The post-remedial action conceptual site model (see Attachment A-3 to this LUCIP) shows the broken pathways and the remaining residual risk to the future industrial worker.

According to the Savannah River Site future Use Project Report (USDOE 1996), residential use of SRS land should be prohibited.

2.0 LAND-USE CONTROLS

Considering the residual risk mentioned above, and in order to insure the protectiveness of the remedy described above, the GSACU land use control objectives are to:

- prevent contact, removal, or excavation of buried waste or pipelines in the OU areas designated in this LUCIP;
- maintain the use of the site for industrial activities only;
- prevent unauthorized access to the closed CERCLA unit as long as the waste remains a threat to human health or the environment; and
- prevent unauthorized residential or agricultural access to groundwater.

Current access controls and deed notification needed to maintain the future land use are described in the following sections of this LUCIP.

2.1 Access Controls

2.1.1 On-Site Workers

In accordance with WSRC 1D, *Site Infrastructure and Services Manual*, Procedure 3.02, "Site Real Property Configuration Control," use of all lands and waters on SRS shall be coordinated via the Site Use Program. All employees, contractors, and visitors to the SRS require adherence to the Site Use Program. This program ensures that all work performed on the SRS that adds, modifies, or removes features portrayed on the SRS development maps is authorized. No use of land (i.e., excavation or any other land use) shall be undertaken without prior approval documented by a Site Use Permit. This authorization is obtained through the completion of a Site Clearance Request Form. Also, in accordance with Procedure 3.02, all work at SRS that adds to or modifies features or facilities portrayed on SRS development maps (i.e., plot plans of facilities/utilities at SRS) will be authorized by a Site Clearance Permit before any excavation activities are conducted. All site clearance requests will be reviewed to verify that either an approved Site Use Permit has been obtained or that an existing Site Use Permit has sanctioned the request.

SRS, specifically the Site Development, Planning, and Mapping Department, is responsible for updating, maintaining, and reviewing site maps, including Federal Facility Agreement (FFA) (FFA 1993) operable unit (OU) identifications. If a site clearance request is made that may impact an FFA OU, the Site Clearance Request Form is sent to the FFA OU reviewer, who is in the Soil and Groundwater Closure Projects (SGCP), for either approval or disapproval. The roles and responsibilities of each individual are detailed in WSRC 1D, Procedure

3.02. Verification of USDOE approval for intended land use must be obtained before issuance of a Site Clearance Permit. The Site Use and Site Clearance processes are applicable to all activities and personnel on site (including subcontractors).

The processes are controlled within the SRS Quality Assurance (QA) Program. The SRS QA program is the governing QA program for all SRS activities, including those in SGCP. The activities that are performed in SGCP must comply with SRS QA Program procedures as well as with SGCP-specific procedures.

SRS identifies all buildings and facilities on maps used in the Site Use/Site Clearance Program. This waste unit is identified on these maps as a CERCLA facility.

Any work proposed in these areas will be strictly controlled and workers will be appropriately trained and briefed about health and safety requirements if work is deemed necessary for maintenance. No major change in land use nor excavation at the GSACU OU shall be undertaken without USEPA and South Carolina Department of Health and Environmental Control (SCDHEC) approval. To prevent unknowing entry and to ensure that unrestricted use of the waste unit does not occur while under ownership of the government, identification signs will be posted at the unit.

The access control warning signs for the soil covers will be legible for a distance of at least 25 feet. The soil cover access control warning sign is shown in Figure A-5 (Attachment A-4 to this LUCIP).

The access control warning signs for the underground grouted pipeline (Warner's Pond only) will be legible from a distance of at least 25 ft. The underground pipeline access control warning sign is shown in Figure A-6 (Attachment A-4 to this LUCIP).

Custodial responsibilities for maintenance and inspection of the GSACU waste units will be maintained by the Post-Closure Maintenance Group within SGCP.

2.1.2 Trespassers

While under the ownership of USDOE, access control of the entire SRS will be maintained in accordance with the 1992 RCRA Part B Permit Renewal Application, Volume I, Section F.1. This section describes the 24-hour surveillance system (R.61-79.264.14(b)(1)), artificial or natural barriers (R.61-79.264.14(b)(2)(I)), control entry systems (R.61-79.264.14(b)(2)(ii)), and access control warning signs (R.61-79.264.14(c)) in place at the SRS boundary to comply with the security requirements for a RCRA-permitted facility.

2.2 LUCIP Deed Notification

In the long term, if the property is ever transferred to non-federal ownership, the US Government will take those actions necessary pursuant to Section 120(h) of CERCLA. Those actions will include a deed notification disclosing former waste management and disposal activities as well as remedial actions taken on the site. The contract for sale and the deed will contain the notification required by CERCLA Section 120(h).

The deed notification shall, in perpetuity, notify any potential purchaser that the property has been used for the management and disposal of waste. These requirements are also consistent with the intent of RCRA deed notification requirements at final closure of a RCRA facility if contamination will remain at the unit.

The deed shall also include deed restrictions precluding residential use of the property. However, the need for these deed restrictions may be re-evaluated at the time of transfer in the event that exposure assumptions differ and/or the residual

contamination no longer poses an unacceptable risk under residential use. Any re-evaluation of the need for the deed restrictions will be done though an amended ROD with USEPA and SCDHEC review and approval.

In addition, if the site is ever transferred to non-federal ownership, a survey plat of the OU will be prepared, certified by a professional land surveyor, and recorded with the appropriate county recording agency.

Per Section 3.6 of the LUCAP, the post-construction revision of this LUCIP will identify the area under land use restriction via a survey plat certified by a professional land surveyor.

2.3 Field Walkdown and Maintenance for Institutional Controls

After the remediation of the GSACU, only maintenance activities will be required per this remedial action. No operations other than groundwater monitoring (at the monitoring wells) and effluent stream monitoring (at the monitoring stations) will be required.

The results of any events and or actions that indicate some potential compromise of institutional controls will be documented in the FFA Annual Progress Report. All other routine maintenance activities will be documented and maintained in files subject to US EPA and SCDHEC review and audit. A copy of the complete inspection form is maintained in the Soil and Groundwater Closure Projects Administrative Record Files. The land-use controls will be implemented as long as the waste remains a threat to human health or the environment.

The following steps will be implemented to maintain the geosynthetic soil covers for as long as is necessary to prevent contaminant migration above MCL:

- Perform periodic (quarterly at the ORWBG, and annually at HRB, Warner's Pond, and HP-52 Ponds) visual inspections for evidence of damage to the soil cover due to erosion or intrusion by burrowing animals. The inspection will also address upkeep of the vegetative cover and access control barriers (e.g., the access control warning signs). (Attachment A-2 provides a unit-specific inspection checklist for the GSACU waste units).

- Perform necessary repairs (when required as identified during inspection) to maintain the functional integrity of the soil cover, fence (ORWBG only), and access control warning signs.

- Enforce SRS institutional controls through access controls by restricting access to the closed waste unit. Institutional controls will be maintained as long as the waste remains a threat to human health or the environment.

- As required by the National Oil and Hazardous Substance Contingency Plan (NCP), a five-year review of the ROD for the GSACU will be performed as long as the waste remains a threat to human health or the environment.

The waste unit inspectors are to be trained in Hazardous Waste Operations and Emergency Response (HAZWOPER), RCRA Well Inspections (SGCP-specific training), SGCP RCRA Waste Unit Inspections, Radiological Workers, etc., as applicable for the specific inspection. They will also be trained based on the individual requirements of the regulatory approved closure documents for each waste unit. In addition, the inspectors are to attend yearly refresher courses. Over the years, different personnel will conduct the inspections and grass cutting operations.

This unit-specific LUCIP, including the checklist (Attachment A-2), will be appended to the SRS LUCAP.

ATTACHMENT A-1

SURVEY PLAT (Later)

The applicable Survey Plats for the GSACU waste units will be provided in the PCR/CMIR documentation with as-built information for the waste unit closures. (See Section 2.2 of the LUCIP.)

This Page Intentionally Blank

ATTACHMENT A-2

SGCP FIELD INSPECTION CHECKLIST
for the
GENERAL SEPARATIONS AREA CONSOLIDATION UNIT

SGCP FIELD INSPECTION CHECKLIST
for the
GENERAL SEPARATIONS AREA CONSOLIDATION UNIT

This includes H-Area Retention Basin (HRB), Warner's Pond, HP-52 Ponds, and the Old Radioactive Waste Burial Ground (ORWBG) waste units

GSACU Waste unit Inspected: _____

A= Satisfactory **X= Unsatisfactory (Explanation required)**	**A or X**	**Observation or Corrective Action Taken**
1. Verify that the roads are accessible. (HRB, Warner's Pond, HP-52)		
2. Verify that the waste unit warning signs are in acceptable condition, have the correct information, and are legible from a distance of 25 feet. (All sites)		
3. Verify that the fence is in good condition and that the gates are locked. (ORWBG only)		
4. Verify that there are no excavation, digging, or construction activities on the soil cover. (All sites)		
5. Check the integrity of drainage ditches for the presence of excessive erosion, sediment buildup, and any debris restricting water flow. (HRB, Warner's Pond, HP-52)		
6. Verify that no woody vegetation is growing on the soil cover. Remove or identify as needed. (All sites)		

7. Visually check the vegetative cover for grass density, with no bare spots more than 3-feet by 3-feet in area. The height of the vegetative cover should not impair the visual inspection of the soil cover. This will be determined by the inspector. (All sites)		
8. Check the soil cover for signs of erosion or depressions (subsidence). (All sites)		
9. Check for signs of burrowing animals. (HRB, Warner's Pond, ORWBG)		
10. Other		

Inspected By:_____ / _____ Date:_____
(Print Name) (Signature)

Reviewed By:_____ / _____ Date:_____
Post-Closure Manager or Designee (Print Name) (Signature)

CAUTION: The inspector shall notify the Post-Closure Manager (PCM) and Environmental Compliance Authority (ECA) IMMEDIATELY if there has been a breach or compromise of the institutional controls of this waste unit. Refer to procedure SOP-019.

NOTE: All monitoring wells associated with this waste unit are inspected using the SGCP Monitoring Well Inspection Procedure in compliance with South Carolina Hazardous Waste Regulation R.61-79, Subpart F, Groundwater Monitoring.

This Page Intentionally Blank

ATTACHMENT A-3

CONCEPTUAL SITE MODEL
for the
GENERAL SEPARATIONS AREA CONSOLIDATION UNIT
POST-REMEDIAL ACTION

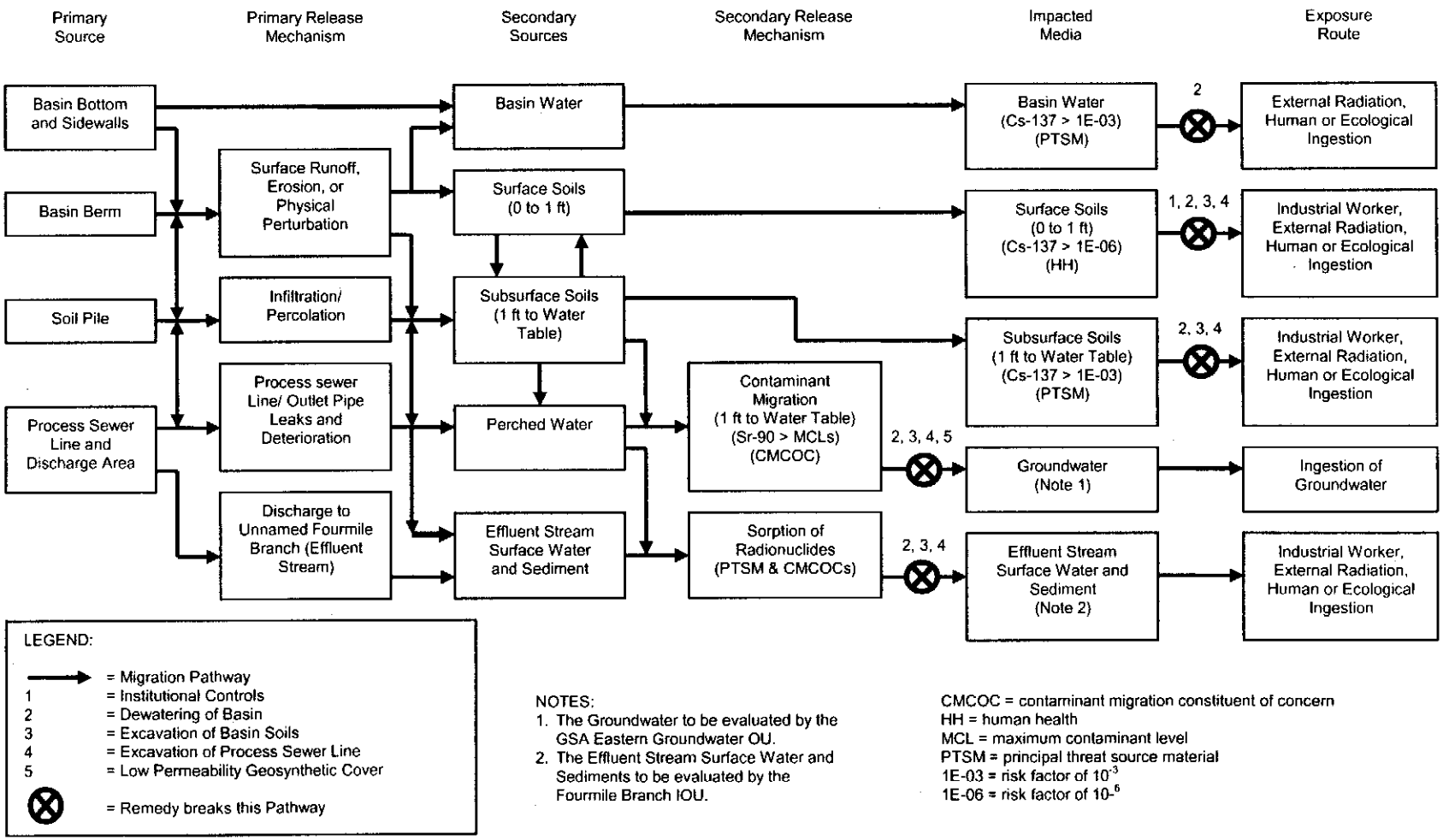

Figure A-1. Conceptual Site Model for HRB Post-Remedial Action

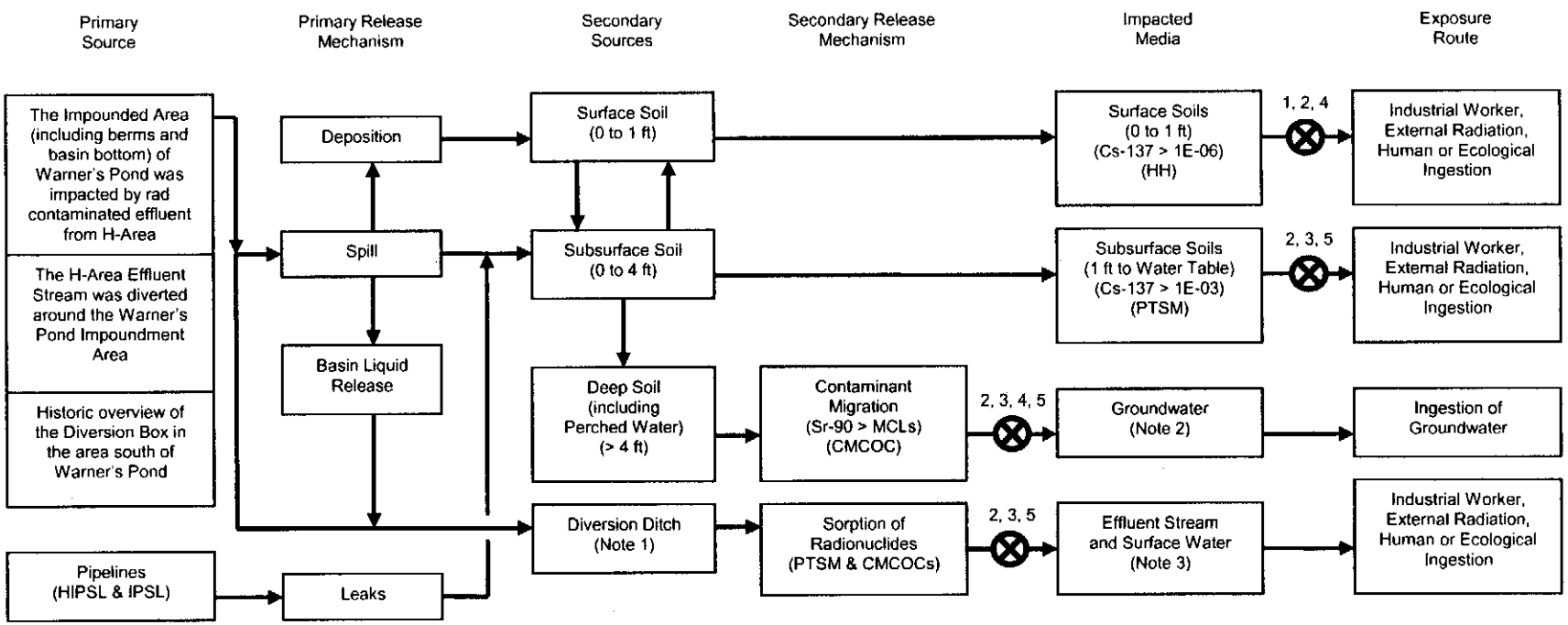

LEGEND:

→ = Migration Pathway
1 = Institutional Controls
2 = Excavation of Basin Soils
3 = Excavation of Process Sewer Lines
4 = Low Permeability Geosynthetic Cover
5 = Grouting of Process Sewer Lines that cannot be Excavated
⊗ = Remedy breaks this Pathway

NOTES:
1. The Diversion Ditch refers to the Effluent Stream path east of the Former Pond area.
2. The Groundwater to be evaluated by the GSA Eastern Groundwater OU.
3. The Effluent Stream Surface Water and Sediments to be evaluated by the Fourmile Branch IOU.

CMCOC = contaminant migration constituent of concern
HH = human health
HIPSL = H-Area inactive process sewer line
IPSL = inactive process sewer line
MCL = maximum contaminant level
PTSM = principal threat source material
rad = radiological
1E-03 = risk factor of 10^{-3}
1E-06 = risk factor of 10^{-8}

Figure A-2. Conceptual Site Model for Warner's Pond Post-Remedial Action

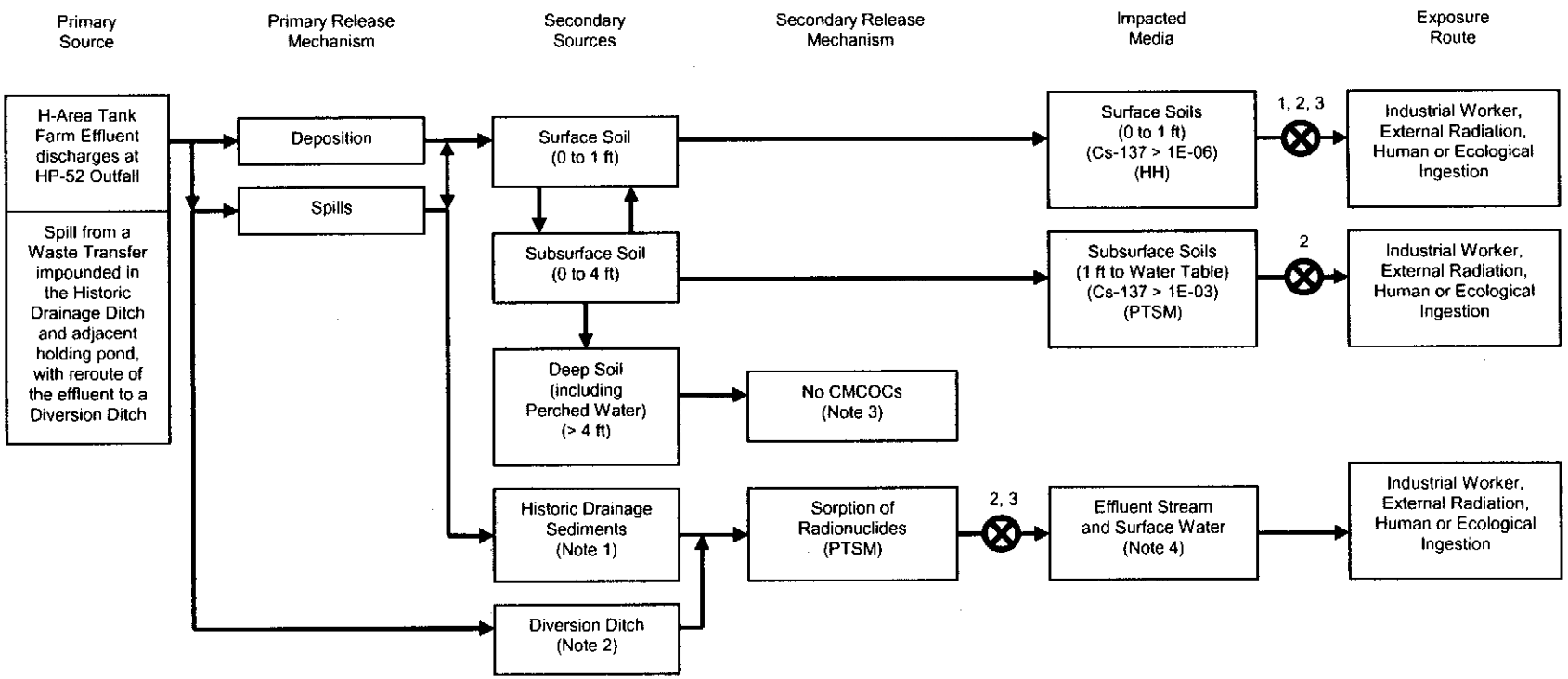

LEGEND:

→ = Migration Pathway
1 = Institutional Controls
2 = Excavation of Basin Soils
3 = Soil Cover
⊗ = Remedy breaks this Pathway

NOTES:
1. The Historic Drainage Sediments refers to Old Effluent Ditch and the Former Pond Area.
2. The Diversion Ditch refers to Existing Effluent Ditch and the 1971 Dogleg.
3. The Groundwater to be evaluated by the GSA Eastern Groundwater OU.
4. The Effluent Stream Surface Water and Sediments to be evaluated by the Fourmile Branch IOU.

CMCOC = contaminant migration constituent of concern
HH = human health
MCL = maximum contaminant level
PTSM = principal threat source material
1E-03 = risk factor of 10^{-3}
1E-06 = risk factor of 10^{-6}

Figure A-3. Conceptual Site Model for HP-52 Ponds Post-Remedial Action

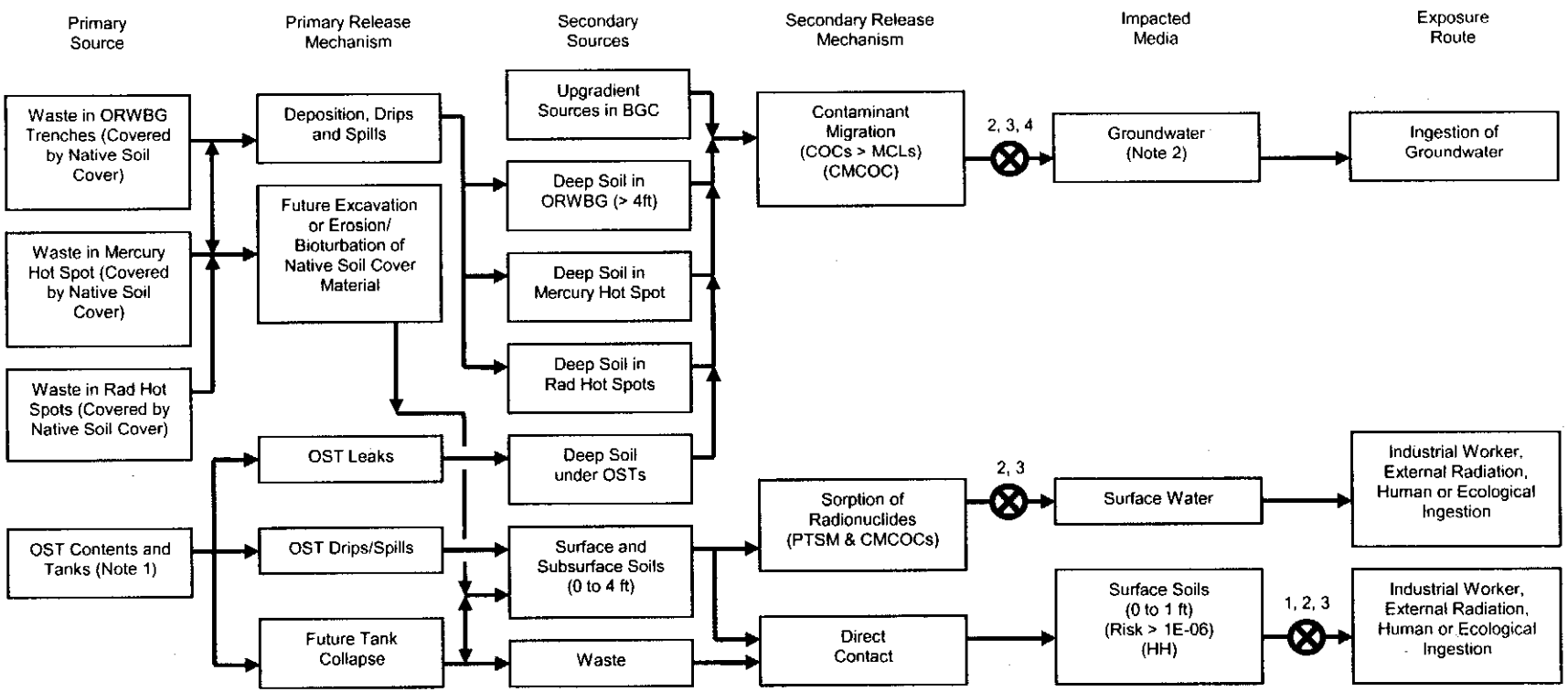

LEGEND

→ = Migration Pathway
1 = Institutional Controls
2 = Low Permeability Geosynthetic Cover
3 = OST Closure Project (Other, see Note 1)
4 = Other Corrective Action (see Note 2)
⊗ =Remedy Breaks this Pathway

Notes:
1. The OSTs were filled with grout and stabilized as part of the OST Closure Project.
2. Groundwater is to be addressed by the corrective action program in the SRS RCRA Part B permit for the MWMF.

BGC = Burial Ground Complex
CMCOC = contaminant migration constituent of concern
COC = constituent of concern
HH = human health
MCL = maximum contaminant level
MWMF = Mixed Waste Management Facility
OST = old solvent tank
PTSM = principal threat source material
Rad = Radiological

Figure A-4. Conceptual Site Model for the ORWBG Post-Remedial Action

This Page Intentionally Blank

ATTACHMENT A-4

ACCESS CONTROL WARNING SIGNS

NAME OF UNIT*
(Building number, if applicable)*

DANGER UNAUTHORIZED PERSONNEL
KEEP OUT

THIS WASTE UNIT WAS USED TO
MANAGE HAZARDOUS SUBSTANCES.
DO NOT DIG OR EXCAVATE.
DO NOT ENTER WITHOUT CONTACTING THE
WASTE UNIT CUSTODIAN.

CUSTODIAN: MANAGER, POST-CLOSURE MAINTENANCE
PHONE: (803) 952-6882

* Name of waste unit and building identification will inserted as applicable.

Figure A-5. Soil Cover Access Control Warning Sign

WARNER'S POND
(685-23G)

DANGER

UNAUTHORIZED PERSONNEL
KEEP OUT

THIS SUBSURFACE PIPING
WAS USED TO CONVEY
HAZARDOUS SUBSTANCES

DO NOT DIG OR EXCAVATE
WITHOUT CONTACTING THE
WASTE UNIT CUSTODIAN

CUSTODIAN: MANAGER, POST-CLOSURE MAINTENANCE
PHONE: (803) 952-6882

Figure A-6. Underground Piping Access Control Warning Sign