LUCIP for the
L-Area Oil and Chemical Basin, 904-83G

Appendix A Post-Construction Report/Final Remediation Report
for the L-Area Oil and Chemical Basin, 904-83G

WSRC-RP-2001-4078, Revision.1, September 2001

NOTE: The Westinghouse Savannah River Company (WSRC) and Department of Energy (DOE) organizations responsible for environmental restoration at the Savannah River Site underwent name changes in 2003, as shown below. The responsibilities as outlined in the following document did not change.

Organization	**Previous Name**	**Current Name**
WSRC	Environmental Restoration Division (ERD)	Soils and Groundwater Closure Projects (SGCP)
DOE	Environmental Restoration Division (ERD)	Soil and Groundwater Project (SGP)

This page was intentionally left blank.

APPENDIX A

LUCIP
for L-Area Oil and Chemical Basin (Bldg. 904-83G) (U)

LAND USE CONTROL IMPLEMENTATION PLAN (LUCIP)

The L-Area Oil and Chemical Basin (LAOCB) LUCIP will be appended to the Savannah River Site (SRS) Land Use Control Assurance Plan (LUCAP), which has been approved by the United States Department of Energy (USDOE), United States Environmental Protection Agency (USEPA), and South Carolina Department of Health and Environmental Control (SCDHEC). SRS will be responsible for the implementation of the LUCIP.

1.0 REMEDY SELECTION

1.1 LAOCB Operable Unit

The LAOCB and L-Area Acid/Caustic Basin (LAACB) source operable unit (OU) is listed as a Resource Conservation and Recovery Act (RCRA) 3004(u) Solid Waste Management Unit/Comprehensive Environmental Response, Compensation and Liability Act (CERCLA) unit in Appendix C of the Federal Facility Agreement (FFA).

The selected remedial alternative was developed in accordance with CERCLA, as amended, RCRA, and to the extent practicable, the National Oil and Hazardous Substances Pollution Contingency Plan (NCP). The decision in the Record of Decision (ROD) document is based on the Administrative Record File for this specific RCRA/CERCLA unit.

Based on the LAOCB/LAACB RCRA Facility Investigation/Remedial Investigation (RFI/RI) Report and the Baseline Risk Assessment (BRA), the LAOCB source OU posed significant risk to human health and the environment.

Therefore, a determination has been made that the combination of in situ solidification/stabilization (S/S) of the pipeline, excavation and placement of the pipeline in the LAOCB, and in situ S/S and capping of the LAOCB is protective of human health and the environment for the contamination remaining in the LAOCB pipeline and soil.

Based on the LAOCB/LAACB RFI/RI Report and the BRA, the LAACB source OU poses no significant risk to human health and the environment. Therefore, a determination has been made that a No Action alternative is appropriate for the LAACB. The No Action alternative will be protective of human health and the environment.

As stated in the ROD, the groundwater has been identified as a separate OU and is therefore considered outside the scope of LAOCB remedial action.

1.2 General Description of LAOCB

The LAOCB is located within the SRS, approximately 300 feet south of the L-Area perimeter fence and 1,250 feet north of L Lake. The area lies at an elevation of approximately 235 feet above mean sea level and 45 feet above the elevation of L Lake. Surface water runoff in L Area drains southward to L Lake via overland flow and small intermittent stream channels and drainage ditches. The water table is approximately 25 feet below ground surface in the area of the LAOCB.

The LAOCB measured approximately 182 feet long by 108 feet wide at the berm, with an average depth of 12 feet. The berm diverted overland flow away from the basin. The LAOCB previously contained water from direct precipitation and low-lying vegetation indigenous to the area. It was surrounded by a chain link fence and was posted as a radiological soil contamination area (SCA).

The LAOCB was constructed in 1961 as an unlined seepage basin. Prior to its construction, approximately 750 feet of 6-inch diameter steel pipeline was originally installed from the maintenance hot shop (Building 717-G) to the L-Area Seepage Basin. After the LAOCB was constructed, wastewater was diverted to the LAOCB through a portion of the 6-inch pipeline between the hot shop and the LAOCB; the remainder of the pipeline was plugged off and taken out of use. A second 2-inch diameter steel pipeline, approximately 450 feet long and located just south of the 6-inch pipeline, was also used between the hot shop and the LAOCB. Wastewater from other areas of SRS was transported in drums and tanker trucks and was disposed in the basin via a bermed concrete drainage pad, located outside and upgradient at the north side of the basin. The basin was put in operation in 1961 and remained active until 1979.

The LAOCB is no longer a radiological facility. The pipelines were buried in areas designated as underground radiological material areas (URMA).

1.3 Nature and Extent of Contamination in LAOCB Soils and Pipelines

LAOCB soils presented the greatest risk at the unit. Significant carcinogenic risks to the potential future worker or resident were driven by potential exposure from direct radiation, ingestion of soil, and ingestion of produce grown in the LAOCB soils, which were contaminated with radionuclides (primarily cobalt-60 and cesium-137) to a depth of less than two feet. Noncarcinogenic risks were driven primarily by ingestion of basin soils contaminated with chromium and lead. The vegetation within the LAOCB security fence was contaminated with radionuclides from the basin. The concrete drainage pad and associated piping within the staging area at the north end of the LAOCB were contaminated with fixed and/or transferable radioactive contamination. Four existing monitoring wells (LCOs 1, 2, 3, 4) potentially provided a conduit for the migration of unit constituents of concern (COCs) to the water table aquifer in the vicinity of the basin.

No manmade radionuclide contamination of soils existed outside and adjacent to the LAOCB security fence; the detected radionuclides outside the LAOCB fence were strictly naturally occurring.

Results of investigation on the LAOCB pipelines indicated that soils surrounding the pipelines had not been significantly impacted by unit operation. Carcinogenic and noncarcinogenic risks posed by the pipeline soils were due to naturally occurring metals and radionuclides that are typical of SRS soils. However, relatively high levels of radioactive contamination were detected on the internal surface of the LAOCB pipelines. Future deterioration of the pipeline's steel walls could have created an unacceptable risk to the environment.

Table 3 of the ROD summarizes the on-unit risks posed by LAOCB.

1.4 Remedial Action Overview

1.4.1 The LAOCB Remedial Action

The remedial action was applicable to the LAOCB soils and pipelines (associated pipelines between the hot shop and the western limit of the proposed LAOCB cover).

The selected remedial action for the LAOCB soils and pipelines included the following key elements (WSRC 1997b):

- in situ stabilization of the LAOCB pipelines' interior and excavation of the stabilized pipelines, including the surrounding contaminated soils (if any), and their placement in the LAOCB for stabilization and solidification;
- in situ S/S of LAOCB soils and pipelines, followed by capping of the LAOCB with a low permeability (hydraulic conductivity of 1×10^{-5} cm/sec or less) engineered soil cover, and

- maintenance and institutional control of the capped LAOCB as long as the waste remains a threat to human health and the environment.

The objectives of the LAOCB remedial action were to eliminate risks posed by direct external exposure to radiation, ingestion, and inhalation of radionuclides and to prevent or mitigate the leaching and migration of COCs to the groundwater (WSRC 1997b, WSRC 1997c). The post-remedial action Conceptual Site Model in Figure A-1 of this LUCIP illustrates how the selected remedy achieves the remedial action objectives.

2.0 LAND USE CONTROL

For the LAOCB, the following land use control (LUC) objective is necessary to ensure protectiveness of the remedy:

- Control access to the LAOCB unit in accordance with the current site use/site clearance programs, including access control signs in the area to indicate that the stabilized soil beneath the unit is contaminated with radionuclides.

- Prevent unauthorized access to the groundwater.

The elements of the institutional control corrective action, which consists of land restrictions without any engineering controls, are composed of deed notifications when the parcel is transferred from federal ownership (Section 2.1), access controls such as posting identification signs (Section 2.2), and field walkdowns to inspect general site conditions and maintenance (Section 2.3). These land use controls will remain in place as long as the waste remains a threat to human health and the environment.

2.1 Deed Notification

A deed notification shall be filed in the appropriate county records in accordance with CERCLA 120(h), which requires the government to create a deed when land on which a hazardous substance was stored, released, or disposed of is transferred to non-federal ownership. In the event the property is transferred, a deed notification will be filed with Aiken County. Per CERCLA 120(h)(3)(A), the deed shall contain, to the extent practical, such information as is available based on the complete search of agency files, including the following:

- A notice of the type and quantity of such hazardous substances
- Notice of the time at which such storage, release, or disposal took place
- A description of the remedial action taken, if any

Per CERCLA 120(h)(3)(B), the deed shall also contain a covenant warranting that

- All remedial action necessary to protect human health and the environment with respect to any such substance remaining on the property has been taken before the date of such transfer.
- Any additional remedial action found to be necessary after the date of such transfer would be conducted by the United States Government.

2.2 Access Controls

2.2.1 On-Site Workers

In accordance with WSRC ID, *Site Infrastructure and Services Manual,* Procedure 3.02, "Site Real Property Configuration Control," use of all lands and waters at SRS shall be coordinated via the Site Use Program. No use of land (i.e.,

excavation or any other land use) shall be undertaken without prior approval documented by a Site Use Permit. Also, in accordance with Procedure 3.02, all work at SRS that adds to or modifies features or facilities portrayed on SRS development maps (i.e., plot plans of facilities/utilities at SRS) will be authorized by a Site Clearance Permit before excavation activities take place. All Site Clearance Requests are reviewed to verify that either an approved Site Use Permit has been obtained or that an existing Site Use Permit has sanctioned the request, Verification of USDOE approval for intended land use must be obtained before a Site Clearance Permit is issued. The site use and site clearance processes are applicable to all activities and personnel on site (including subcontractors). The processes are controlled under the SRS Quality Assurance Program.

SRS identifies all buildings and facilities on maps used in the Site Use/Site Clearance Program and requires a 200-foot buffer zone around each facility. This waste unit is identified on these maps as a CERCLA facility.

All work in these areas will be strictly controlled, and workers will be appropriately trained and briefed about health and safety requirements if work is deemed necessary for maintenance. Any changes in the use or disturbance of the LAOCB will be cleared with the USEPA and SCDHEC before disturbance occurs. To prevent unknowing entry and to ensure that unrestricted use of the waste unit does not occur while under ownership of the government, identification signs have been posted at the unit. The signs are legible from a distance of 25 feet. The sign reads as follows:

L-Area Oil and Chemical Basin

"DANGER"
UNAUTHORIZED PERSONNEL KEEP OUT.
THIS UNIT WAS USED TO MANAGE HAZARDOUS SUBSTANCES. DO NOT DIG OR EXCAVATE. DO NOT ENTER WITHOUT CONTACTING THE WASTE SITE CUSTODIAN.
CUSTODIAN: MANAGER, POST CLOSURE MAINTENANCE
PHONE: (Contact Phone Number)

2.2.2 Trespassers

Additionally, while under the ownership of USDOE, access control of the entire SRS will continue to be maintained in accordance with the 1992 RCRA Part B Permit Renewal Application, Volume I, Section F.1. To comply with the security requirements for a RCRA-permitted facility, this section describes the 24-hour surveillance system (R.61-79.264.14(b)(1)), artificial or natural barriers (R.61-79.264.14(b)(2)(i), control entry systems (R.61-79.264.14(b)(2)(ii), and warning signs (R.61-79.264.14(c)) in place at the SRS boundary.

2.3 Field Walkdowns and Maintenance for Institutional Controls

Monitoring will be performed to verify that LUCIP requirements have been met. Semi-annual monitoring of the LAOCB OU, 904-83G, will be conducted for accuracy and legibility of signs, visible subsidence or erosion of the waste unit, proper vegetative growth, burrowing animals, proper access to the facility, mowing, etc. Subsidence or erosion will be corrected by backfilling the affected area with clean soil and seeding the area to prevent further erosion. USEPA and SCDHEC will be notified of the results of any inspection, event, and/or action that indicates a potential compromise of institutional controls within 30 days of identification. The notification and the reason for the notification will be documented in the Federal Facility Agreement Annual Progress Report. All other routine maintenance activities (i.e., mowing, etc.) will be documented, and the documentation will be maintained in files that are subject to USEPA and SCDHEC review and audit. A copy of the completed inspection form will be maintained in Environmental Restoration Division Administrative Record Files.

Inspections at the LAOCB will be performed to ensure that institutional controls remain protective and consistent with all remedial action objectives. Monthly inspections will be performed for the first 2 years and until permanent vegetation is established. After that time, inspections will be performed semi-annually per the attached inspection checklist

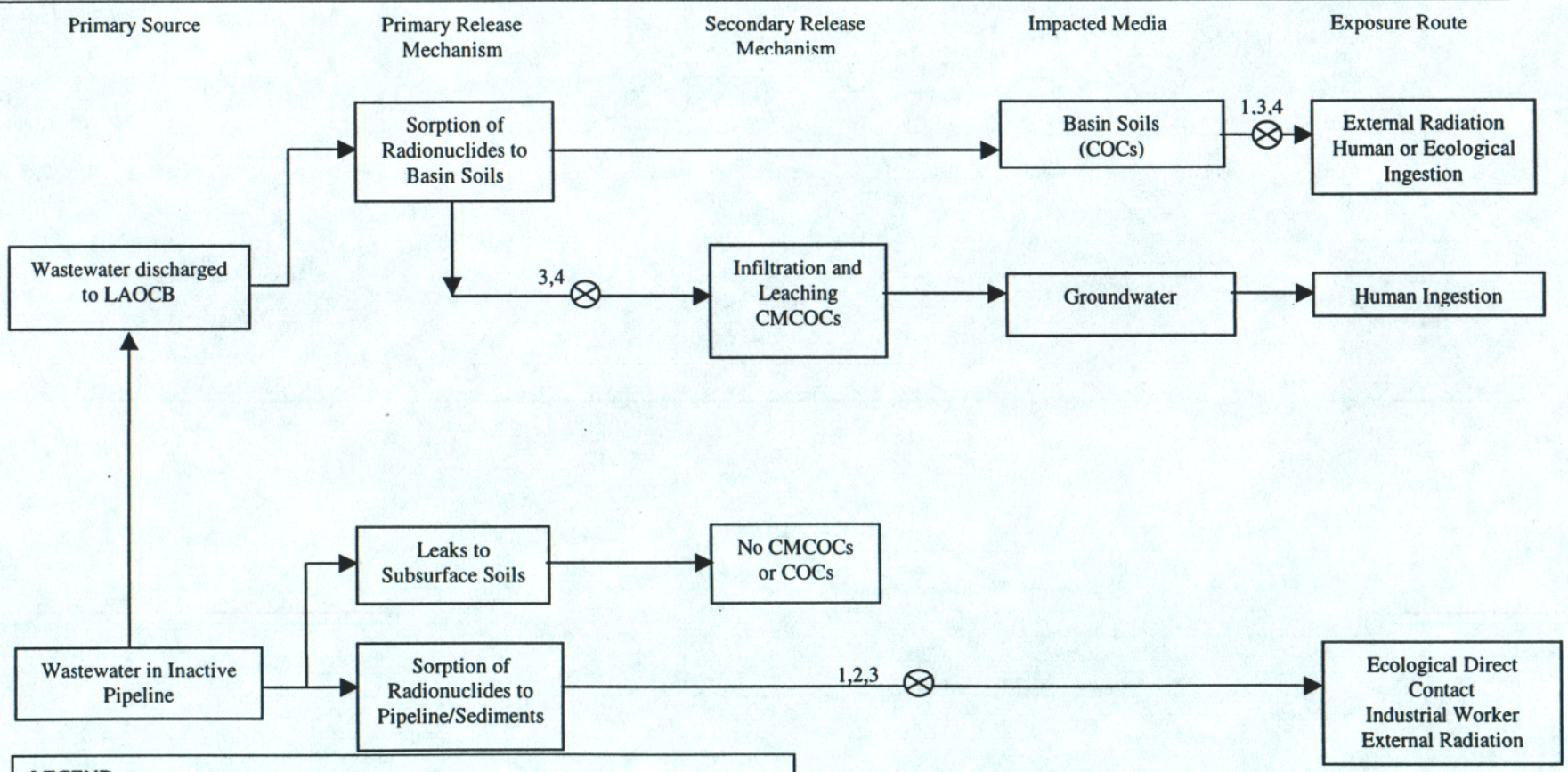

LEGEND
→ = Pathways – past, current and hypothetical future
1. = Institutional Controls
2. = Consolidation of Soils into Basin
3. = In Situ Stabilization
4. = Low-permeability Soil Cover
⊗ = Remedy breaks this pathway

Notes: In Situ stabilization meets CERCLA preference for treatment and provides qualitative reduction in leachability.
COC = contaminant of concern
CMCOC = contaminant migration contaminant of concern

Figure A-1. Conceptual Site Model for the L-Area Oil and Chemical Basin Post Remedial Action

ATTACHMENT TO LUCIP

ER INSPECTION CHECKLIST FOR L-AREA OIL AND CHEMICAL BASIN

Waste Site: _____ **A = Satisfactory** **X = Unsatisfactory (Comments required)**	**A or X**	**Comments or Corrective Action Taken (See Maintenance Register for Corrected Items)**
Check to see if the site needs mowing.		
Verify that the basin and roads are accessible.		
Check for potential encroachments. (Ensure that there is no building on the site.)		
Verify all signs are intact, in good condition, and legible from a distance of at least 25 feet.		
Visually check vegetative cover for grass density. There should be no woody vegetation or shrubs growing on the cover. The height of the vegetative growth should not impair the visual inspection of the site.		
Check the integrity of drainage ditches (if any) for presence of excessive erosion, sediment buildup, and any debris restricting water flow.		
Visually inspect the concrete markers at four corners of the basin to ensure their integrity. The concrete should be visible and free of damage.		
Visually check the basin cover for signs of erosion subsidence and/or depressions.		
Verify that conditions of the roads to the well sites are adequate.		
Inspect the grounds surrounding well sites for vegetation overgrowth, debris, and existence and/or development of erosion features.		

ATTACHMENT TO LUCIP

ER INSPECTION CHECKLIST FOR L-AREA OIL AND CHEMICAL BASIN (Cont'd.)

Waste Site: _____ **A = Satisfactory** **X = Unsatisfactory (Comments required)**	**A or X**	**Comments or Corrective Action Taken (See Maintenance Register for Corrected Items)**
Verify that the well posts and protective covers are in place.		
Verify the well is properly identified per R.61-71.6H (South Carolina well standards and regulations).		
Verify the wells' casings are properly locked per R.61-71.11.C.6 (South Carolina well standards and regulations).		
Verify that the previous "Quarterly Monitoring Well Inspection Summary Report" has been sent to ERD Records Interim Storage. This report can be obtained from ERD Waste Treatment.		
Other		
Comments:		

Inspected By:_____/_____Date:_____Time:_____
(Print Name) (Signature)

Reviewed By:_____/_____Date:_____Time:_____
PM or Designee (Print Name) (Signature)

Note: USEPA and SCDHEC must be notified within 30 days of identification of any area where any breach or compromise of restrictions placed on this institutional control operable unit has occurred.