Designing in Sustainability in an Utility Scale Photovoltaic Array

Tim Green, Brookhaven National Laboratory

Richard Chandler, BP Solar

October 2010

BROOKHAVEN NATIONAL LABORATORY

a passion for discovery

bp solar

Office of Science

U.S. DEPARTMENT OF ENERGY

Print

Close

Biography – Tim Green

Currently the Natural & Cultural Resource Manager at Brookhaven National Laboratory with responsibilities for NEPA, cultural and historic resources, and ecosystem management of the 5,265 acres comprising BNL. Also, serving as President of the Northeast Section of The Wildlife Society.

B.S. in Wildlife Management (West Texas State)

M.S. in Zoology (Texas A&M) – marine invertebrates

Ph.D. in Zoology (Texas A&M) – freshwater aquatic systems.

Past experience includes natural resource management at the Pantex Plant in Amarillo, TX. Refuge management at Cibola NWR in Blythe, CA.

Teaching at multiple community colleges including in TX, AZ, CA and currently teaching at Dowling College on Long Island.

Long Island Solar Farm

- The Project
- Siting
- Solar Arrays
- Designing in Sustainability and Ecological Benefits
- Ecological Research
- End of Life Considerations

Location

bp solar

Brookhaven Science Associates

Print

Close

The Project – Aerial Extent

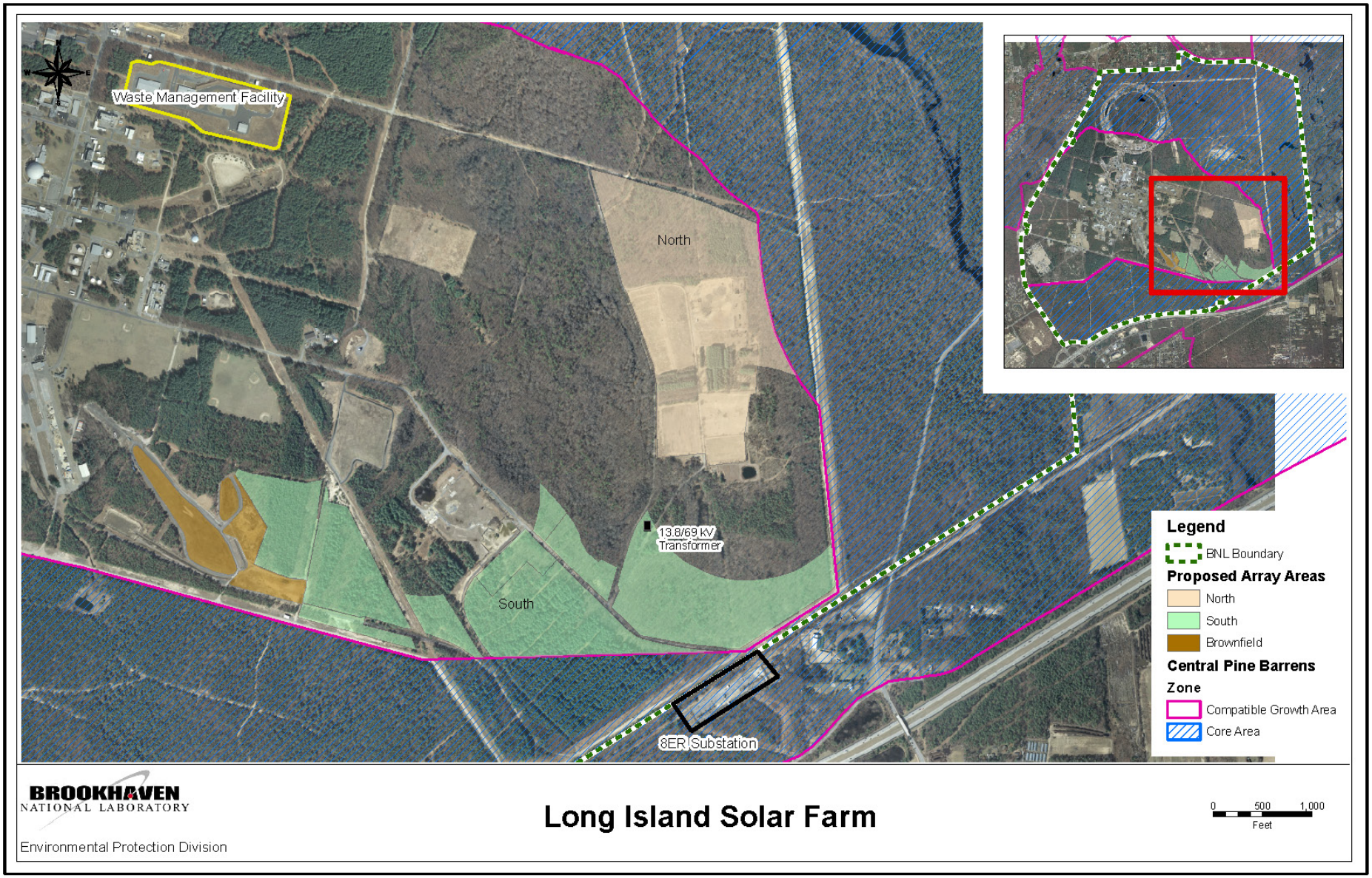

Print

Close

Long Island Solar Farm

- Size: ~32MW (AC)
- Location: Brookhaven National Laboratory
- Technology: Crystalline solar photovoltaic modules
- Land use: ~200 acres
- Construction schedule: Summer 2010 – Fall 2011
- Project is one of 147 demonstration sites chosen for the Sustainable Sites Initiative – see http://www.sustainablesites.org/pilot/

Site Considerations - BNL

- Proximity to electric substation – grid tie point
- Limit impacts to site operations and future science
- Scientific study of array and PV technologies
- Improve the environment; reducing carbon footprint
- Strengthen the local economy
- Encourage economic development
- Transform the solar photovoltaic marketplace

BROOKHAVEN NATIONAL LABORATORY

Figure 4: Alternatives Considered But Not Assessed

Environmental Protection Division

jfh - 08/4/09
k:/arcmap_projects/bp_solar/open_areas_R2.mxd
k:/graphics/bp_solar/alternatives.pdf

Print Close

Current Configuration

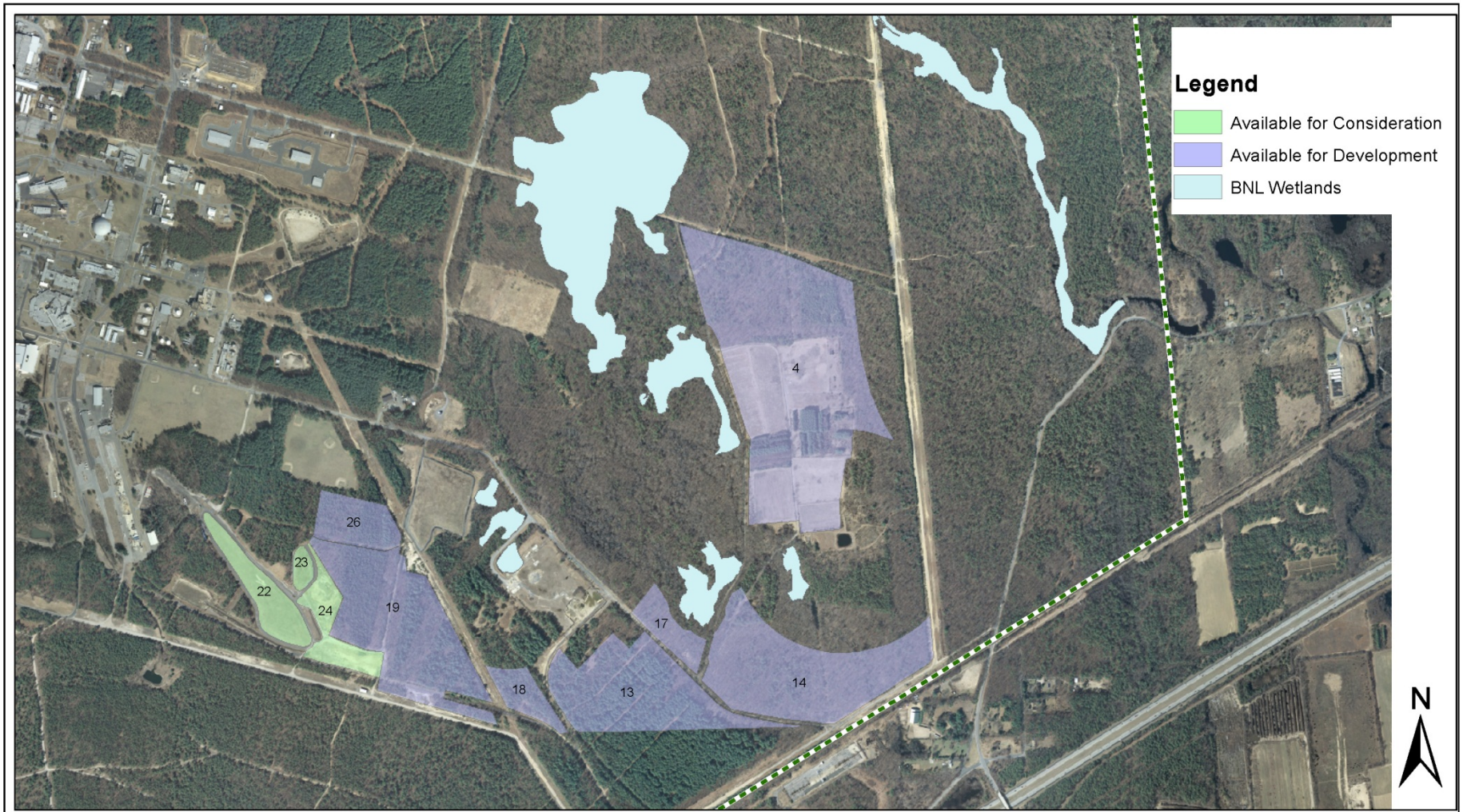

BROOKHAVEN NATIONAL LABORATORY

Environmental Protection Division

Long Island Solar Farm

0 500 1,000 2,000
Feet

** Solar Areas modified to accomidate 100' wetland buffer.

Print

Close

Artist Conceptual Image

Sustainability

- Forest Removal – reduction of carbon sequestration ability ~12,000 Metric tons over 20 years.
- Carbon Avoidance - ~619,000 metric tons over 20 years.
- Understory retained – will continue to sequester carbon and add to soil.
- Minimal impact to soils
- Little or no water usage
- Commitments for recycling and pollution prevention
- Habitat Improvements
- Vegetation Management – IPM for invasives

Reducing Potential Impacts

- Requires minimal grading resulting in less disturbance of understory vegetation
- Tree removal – timing and process
- Wildlife friendly fencing
- Native vegetation planted or left under arrays
- Invasive species management - removal

Positive Ecological Impacts

- 200 acres of deer free area
- Removal of invasive plants protects surrounding area
- Maintenance of native vegetation – wide variability in make-up and density
  - Improved habitat for migratory birds
  - Improved habitat for small mammals
  - Improved habitat for reptiles and amphibians
  - Improved habitat for insects?

Habitat – native ground cover

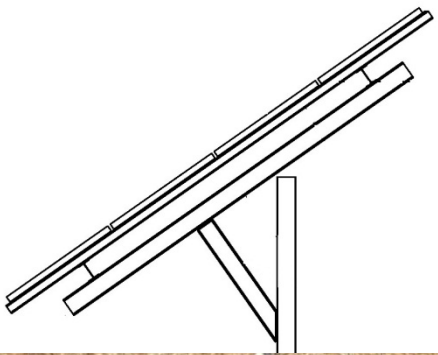

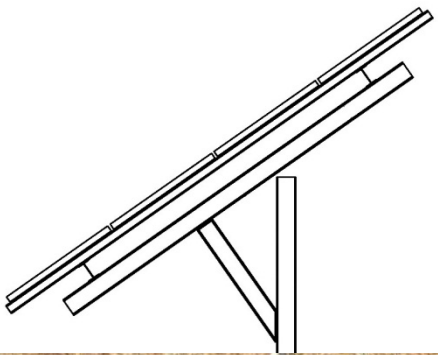

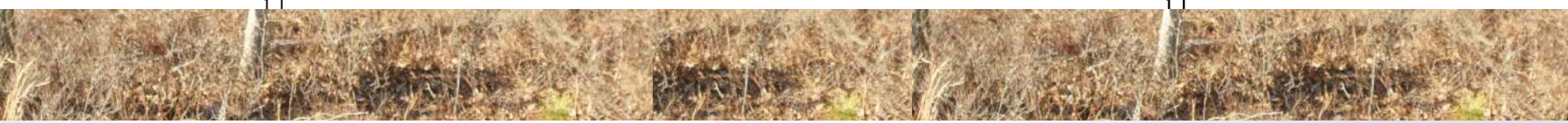

Ecological Research

- Impacts to vegetation make up and health
  - Shading effects
  - Precipitation effects
  - Heat island effects
- Impacts to soils (concentration of acid rain, mercury deposition)
- Impacts of fencing on wildlife populations
- Impacts of arrays on bird populations
- Impacts to surrounding ecosystem

Solar Arrays

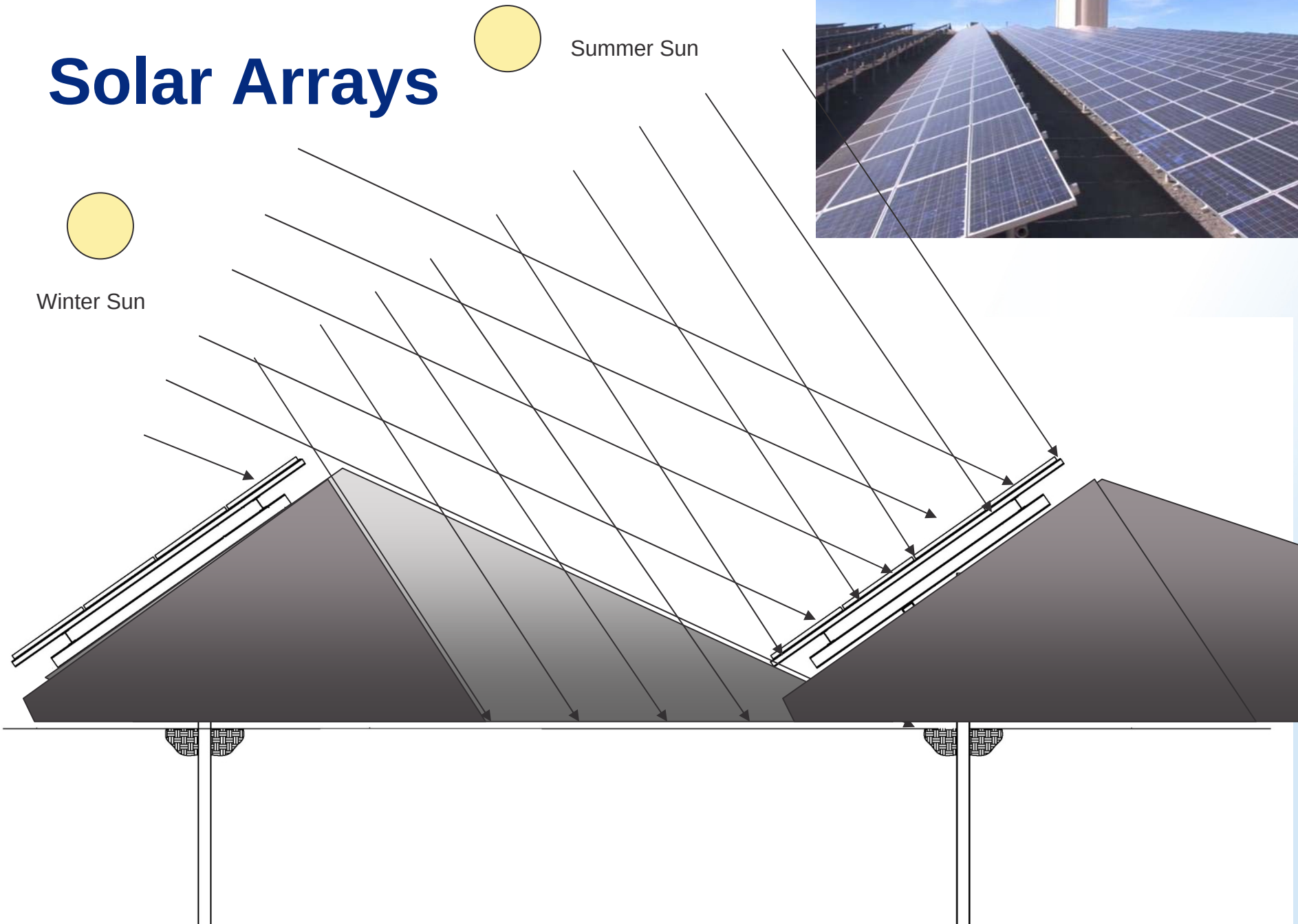

Print

Close

Precipitation

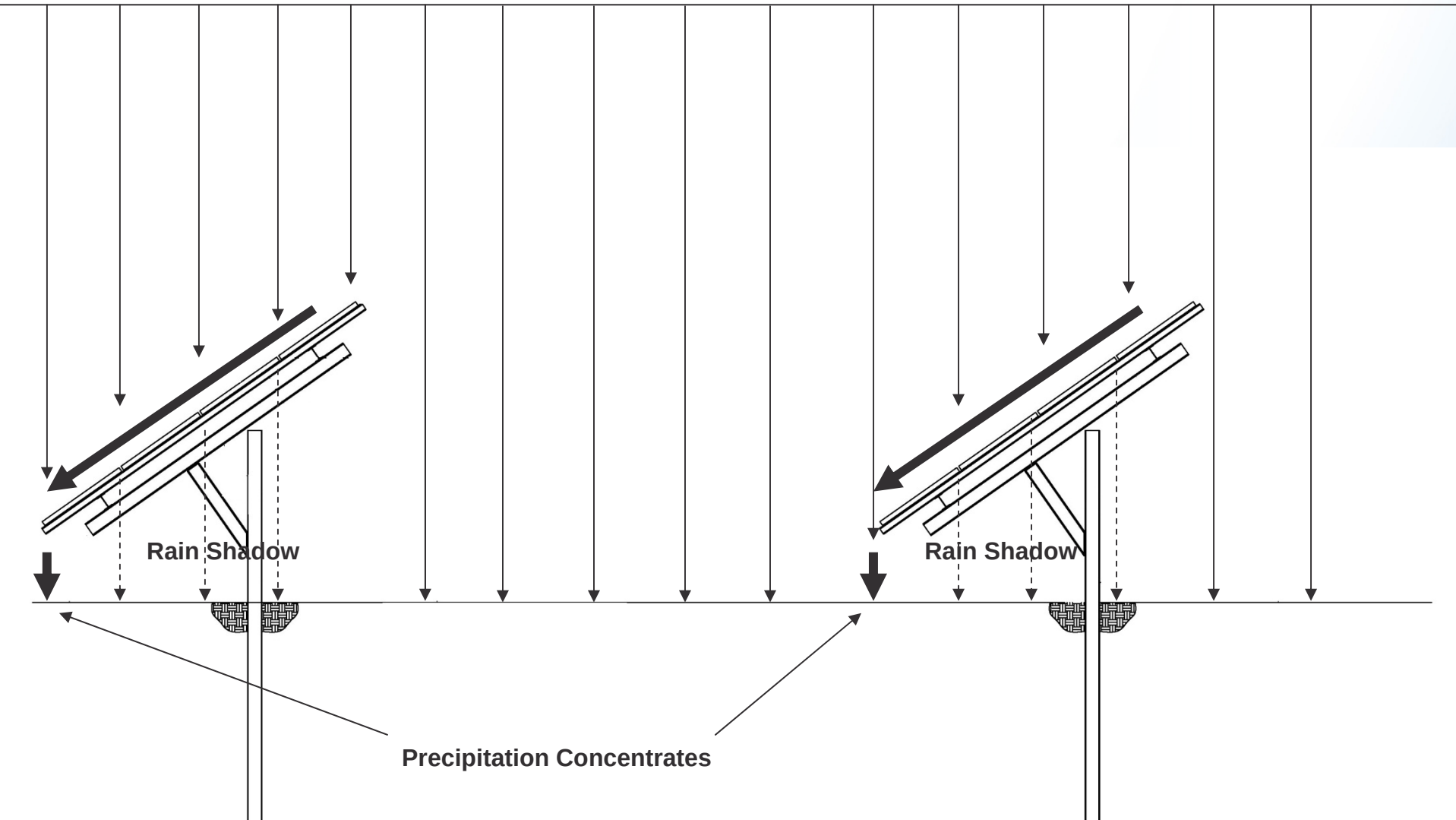

Print

Close

Fencing

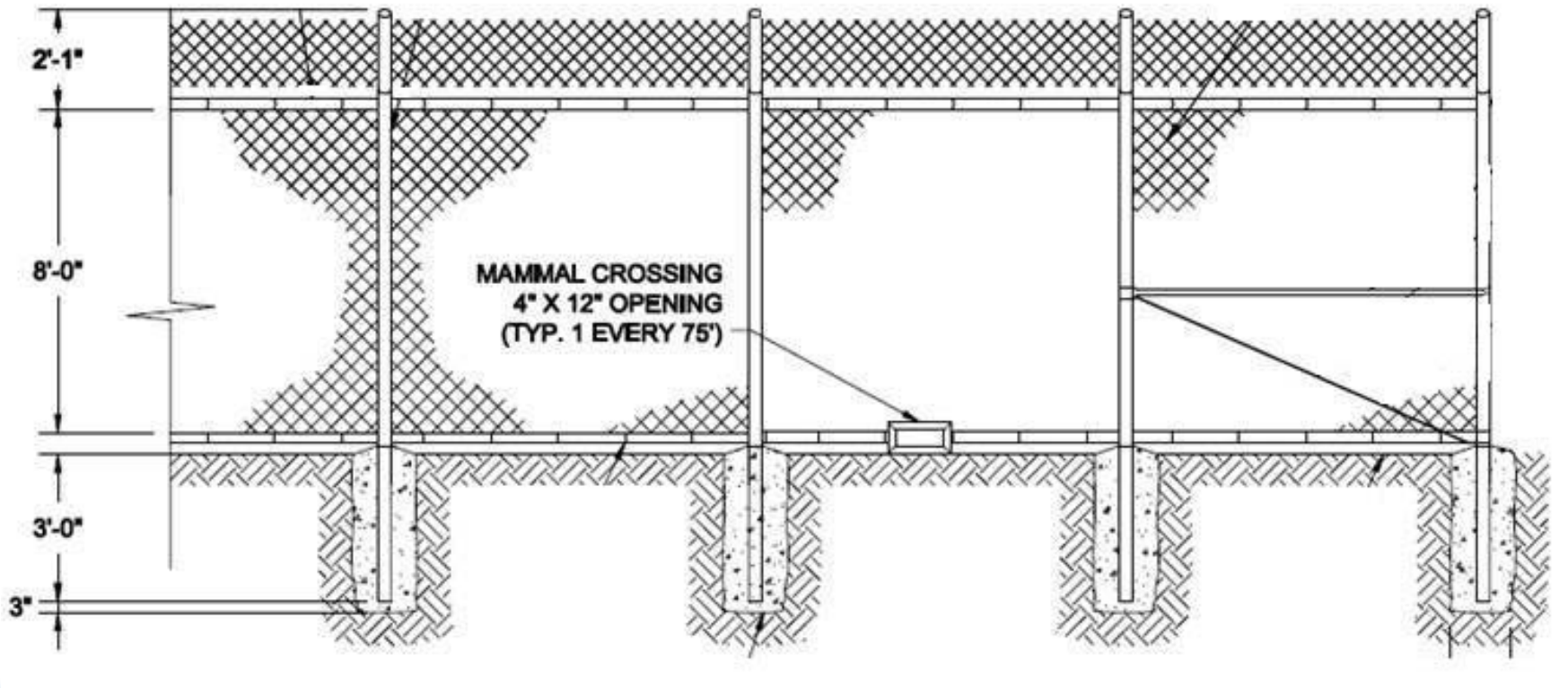

Heat Island?

~164,300 panels

Decommissioning & Restoration

- Array life estimated at 40 yrs., energy contract set for 20 yrs.
  - End of life – likely would result in newer technology being deployed for energy production.
  - Decommissioning – would require removal and disposal of all arrays, inverters, transformers, and fencing
  - Restoration – a restoration plan would be required prior to decommissioning
    - Natural restoration since understory would be present
    - Tree planting within understory
    - Invasive species management