Washington Closure Hanford

Use of Remote Dose Rate Instrumentation

Stevan J. Huddleston, RRPT
Radiological Engineer

DOE Integrated Safety Management Conference
Sept. 15-16, 2010

U.S. Department of Energy
Richland Operations Office

Stevan J. Huddleston

- BS in Environmental Management
- RRPT
- 16.5 years working in radiological control
- 15 years as a radiological control technician
  - Five years in the radiological control training group
- 2009 to present provided support for 100-D/DR, 100-H and 100-K reactor hardware burial grounds
- Involved in spent nuclear fuel (SNF) characterization

Outline

- History of Hanford
- Goals of Washington Closure Hanford (WCH)
- Methods used
  - ISM principles utilized
  - Process of change
- Successes
- Conclusion

History of Hanford

- Short discussion on the history of Hanford
  - Nine plutonium production reactors
  - Reactor hardware burial grounds
- Hazards encountered
  - Anomalies
  - Suspect Spent Nuclear Fuel (SSNF)
  - Heavy equipment

Goals of WCH

- Remediate reactor hardware burial grounds and waste sites
- Maximize the distance between workers and heavy equipment
- Safely identify, segregate and move anomalies and SNF away from Columbia River

Plutonium Production Reactor

Hazards

SSNF

Anomalies

Heavy Equip

Methods Implemented

- Cascading
- Gamma Array
- AMP-100
- Compton Ratio for Testing Environmental Radioactivity (CRATER)

Cascading

Cascading

- Brief discussion
  - What was the process
  - What drove the change
- Benefits
  - Immediate visual identification of anomalous items
- Cons
  - Worker in area near hazards

Gamma Array

Gamma Array

- Brief discussion
  - Description of array
  - What was the process
  - What drove the change
- Benefits
  - Worker away from hazard
- Cons
  - Multiple handling of waste

AMP-100

AMP-100

- Brief description
- What is the process
- Benefits
  - Remote detection of high dose rates
  - Wireless application
- Cons
  - Cables attached to heavy equipment
  - Distance limitations/repeaters

CRATER

CRATER

- Brief discussion of detection methodology

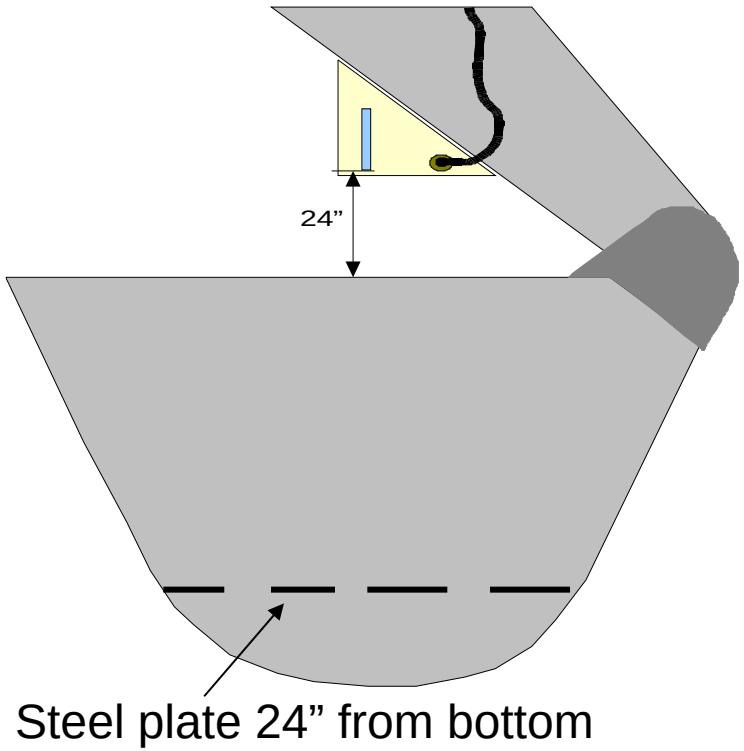

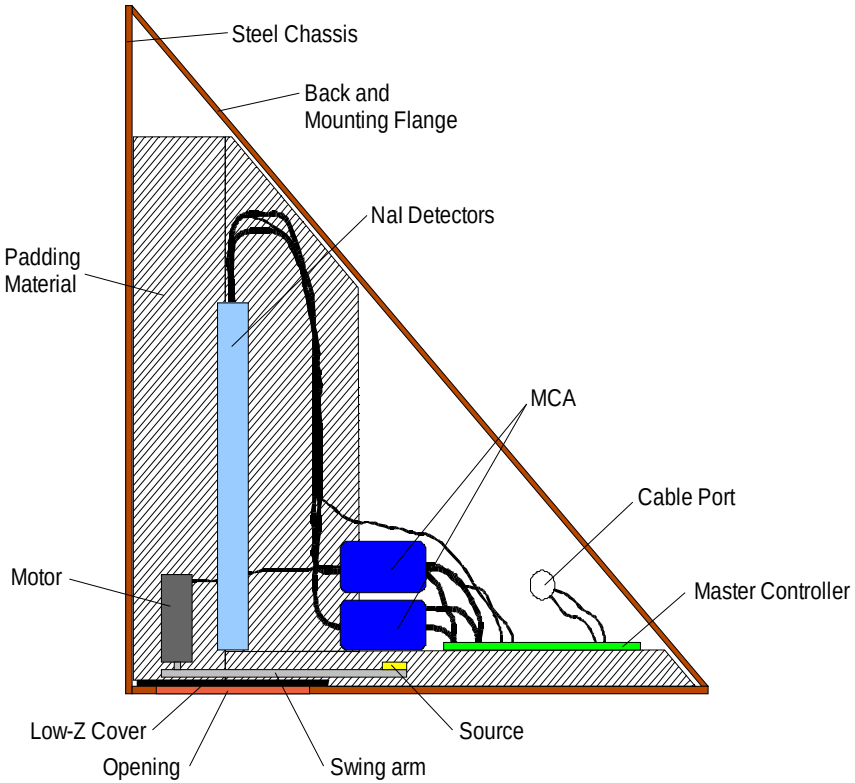

CRATER

- What is the process
- Benefits
  - Real time monitoring for SSNF
  - Worker removed from hazard
- Cons
  - Distributed Cesium-137
  - Bluetooth limitations

Reactor Hardware

Successes

- Worker safety
- Worker involvement
- Improved technology
- Efficiency

Conclusions

- Worker involvement and ISM principles
- Worker safety and efficiency
- Minimize handling of waste material
- Real-time screening for SSNF

Question & Answer

Stevan J. Huddleston sjhuddle@wch-rcc.com 509-948-3185