Melter Bellows Cleanout

SRS ALARA WORKSHOP
MAY 2 - 4, 2005
Augusta Georgia

Presented by

Henry M. Bolen, RRPT
Westinghouse Savannah River Company

Background

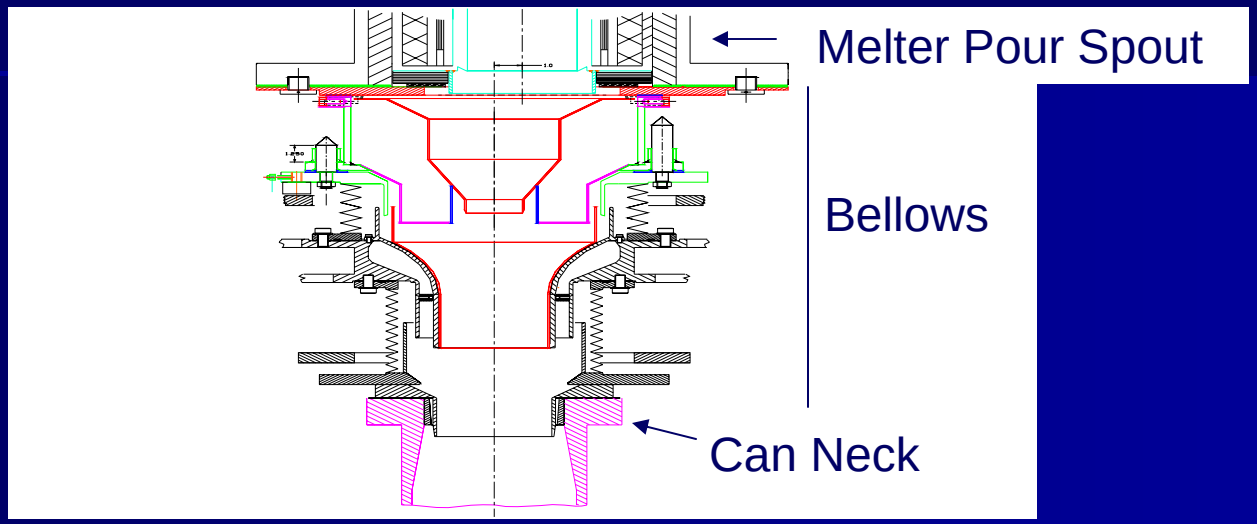

- During normal melter pouring operations, radioactive molten glass is poured from a melter into a canister through a pour spout bellows. The pour spout bellows provides a flexible seal between the melter and the canister.

Heated Bellows Liner

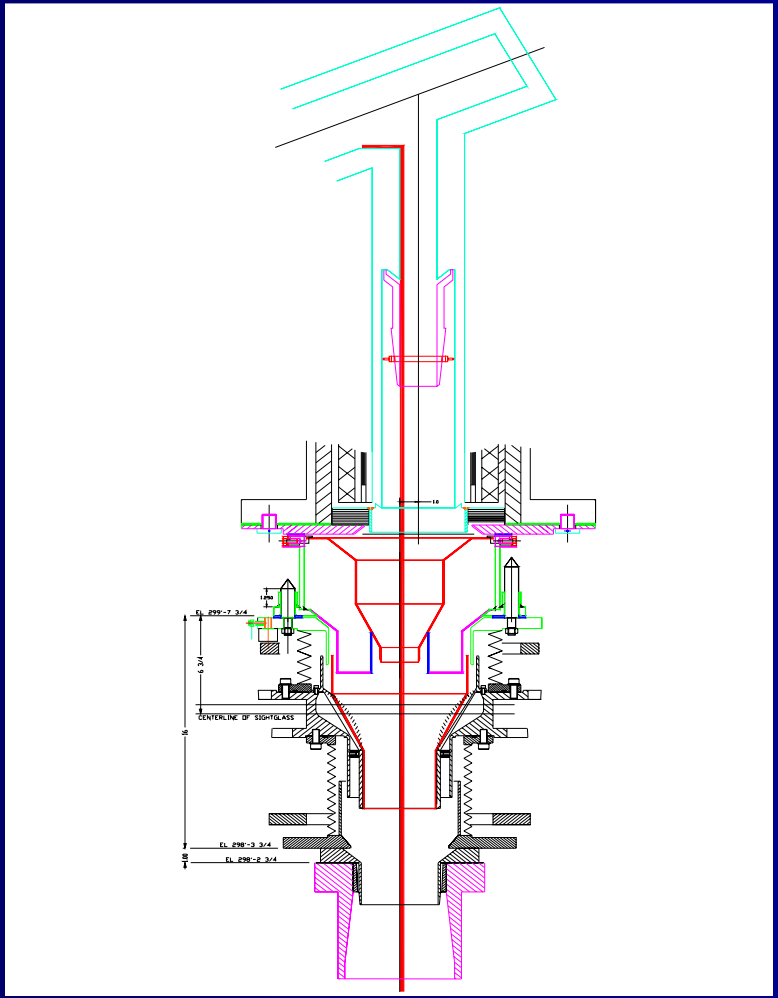

Spare Bellows

Bottom of Bellows

Background

- Periodically the bellows assembly is required to be removed and cleaned.
- Normally performed remotely in a shielded Canyon.
- On 11-13-04, glass plugged the bellows and could not be removed remotely.
- DWPF workers were tasked with manually removing glass from the bellows.
- First time evolution.

Radiological Conditions

- Extremity dose rate: 34,000 mrem/hr
- Skin dose rate: 2,600 mrem/hr
- Whole Body dose rate: 250 mrem/hr
- Contamination levels: 30,000 dpm alpha/100 cm2 and 100 mrad/hr beta-gamma/100 cm2

ALARA Challenges

- The Bellows was estimated to contain seven pounds of radioactive glass.
- Work had to be performed through ¼” wide by 1” long slits located four inches inside the bottom opening.
- Bellows had to be rigged and turned for workers to access the bottom.
- Work to be performed in highly contaminated area.

Bottom of Bellows

ALARA Solutions

Bellows w/ HEPA vac

Needle gun and chisels

- Workers involved extensively in job planning.
- Spare bellows used to perform mockup.
  - Needle gun was chosen as best tool for removing the glass.
  - Custom chisels fabricated to access the air spaces and maximize worker distance from bellows.
  - HEPA Vac w/ custom fabricated attachment used to collect glass debris and control contamination
  - Lexan shield (1/4”) attached to needle gun to reduce extremity exposure from open hole and exposed glass.
  - Shielding blankets placed over areas of bellows not being actively worked.

ALARA Solutions (continued)

- Siemens TeleTrak Teledosimetry system used to monitor workers remotely.
- ALARA Committee review of job plan and work documents.
  - Management involvement
  - ALARA items incorporated into work documents.

Final Results

- No radiological incidents.

- Estimated dose savings due to shielding:
  - Extremity: 15,000 mrem
  - Skin: 4,500 mrem
  - Whole Body: 650 mrem

Lessons Learned

- More debris captured in vacuum HEPA filter than expected. Remote handling method devised for disposal after job completion.
  - **Lesson: Disposal planning could have been better.**
- Although mockup was used extensively in planning, a lifting bail on the mockup was slightly different than the one on the clogged bellows. Field verification could have prevented this problem.
  - **Lesson: Consider all details and perform field verifications when possible during planning. Slight differences may exist between pieces of equipment that are not apparent unless examined in detail.**

Lessons Learned (continued)

- Boroscope camera was used for initial planning efforts but not for initial cleaning attempt. Second cleaning attempt used the boroscope during the cleaning and was successful.
  - **Lesson: Consider alternate ways to monitor work progress in areas that are hard to access or see during the work evolution.**